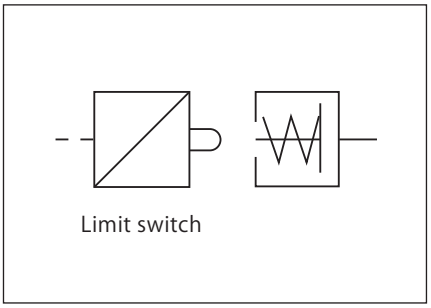

Detects a condition of hydraulic pressure (ON or OFF) in the clamp circuit. If you install a limit switch, you can have an interlock protection device (such as stopping the machining) against pressure OFF condition.

Model	WVL-M- Set pressure※	WVL-H- Set pressure※
Type of mounting	Plug type	
Set pressure range	7～14 MPa (±0.3 MPa)	14～21 MPa (±0.5 MPa)
Plunger stroke	3 mm	
Plunger area	19.6 mm^2	12.6 mm^2
Cylinder capacity	0.06 cm^3	0.04 cm^3
Mass	0.6 kg	

Proof pressure : 21MPa (WVL-M)、31.5MPa (WVL-H)　Operating temperature : 0～70 ℃
Fluid used : General mineral based working fluid (ISO-VG32 or equivalent)
※：Value of the pressure for action. Specify in 1 MPa increment when ordering.　Example : WVL-H-14 (Set Pressure is 14 MPa)
There is also a type that adopts fluorocarbon for seal sections where cutting fluid is applied, as a measure for the use of chlorine-based cutting fluid (this is not thermal resistant specification. Model designation WVL-□-□-V).

model WVL-□-□　Plug type　※No internal filter

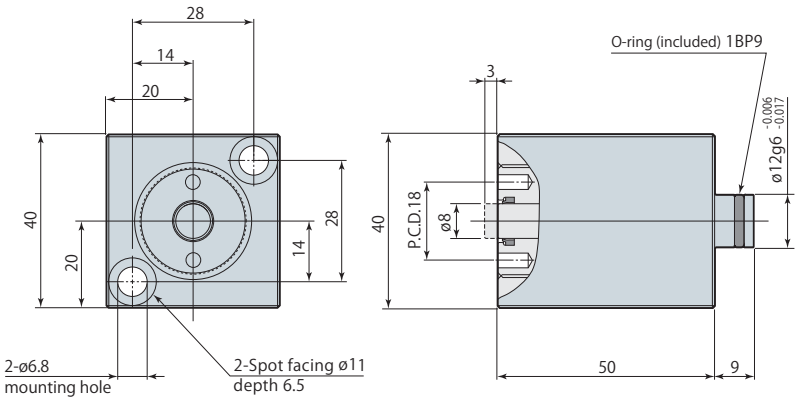

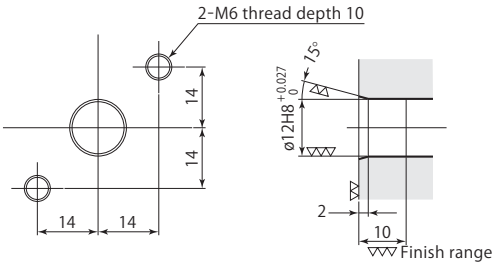

Mounting details

※Mounting screws are not included.

Perfprmance diagram

When hydraulic pressure goes down to the set pressure, the plunger starts returning. The relation between plunger stroke (return length) and the pressure decrease stays constant as under.

WVL-M：2.93 MPa/mm ±10%　(0.34 mm/MPa ±10%)
WVL-H：2.59 MPa/mm ±10%　(0.39 mm/MPa ±10%)

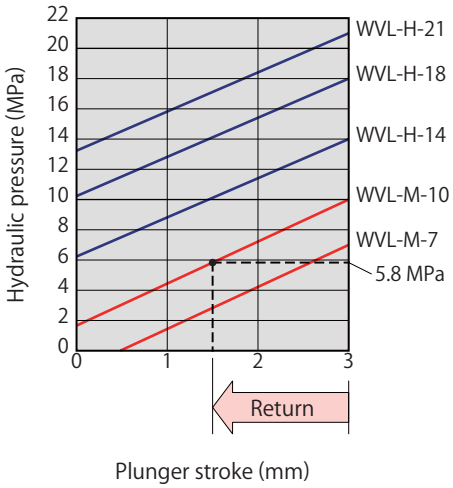

For example, in case of WVL-M-10 (set pressure is 10 MPa), the plunger starts returning at 10 MPa. The hydraulic pressure P at 1.5 mm stroke is : P=10-2.93×1.5=5.6 MPa